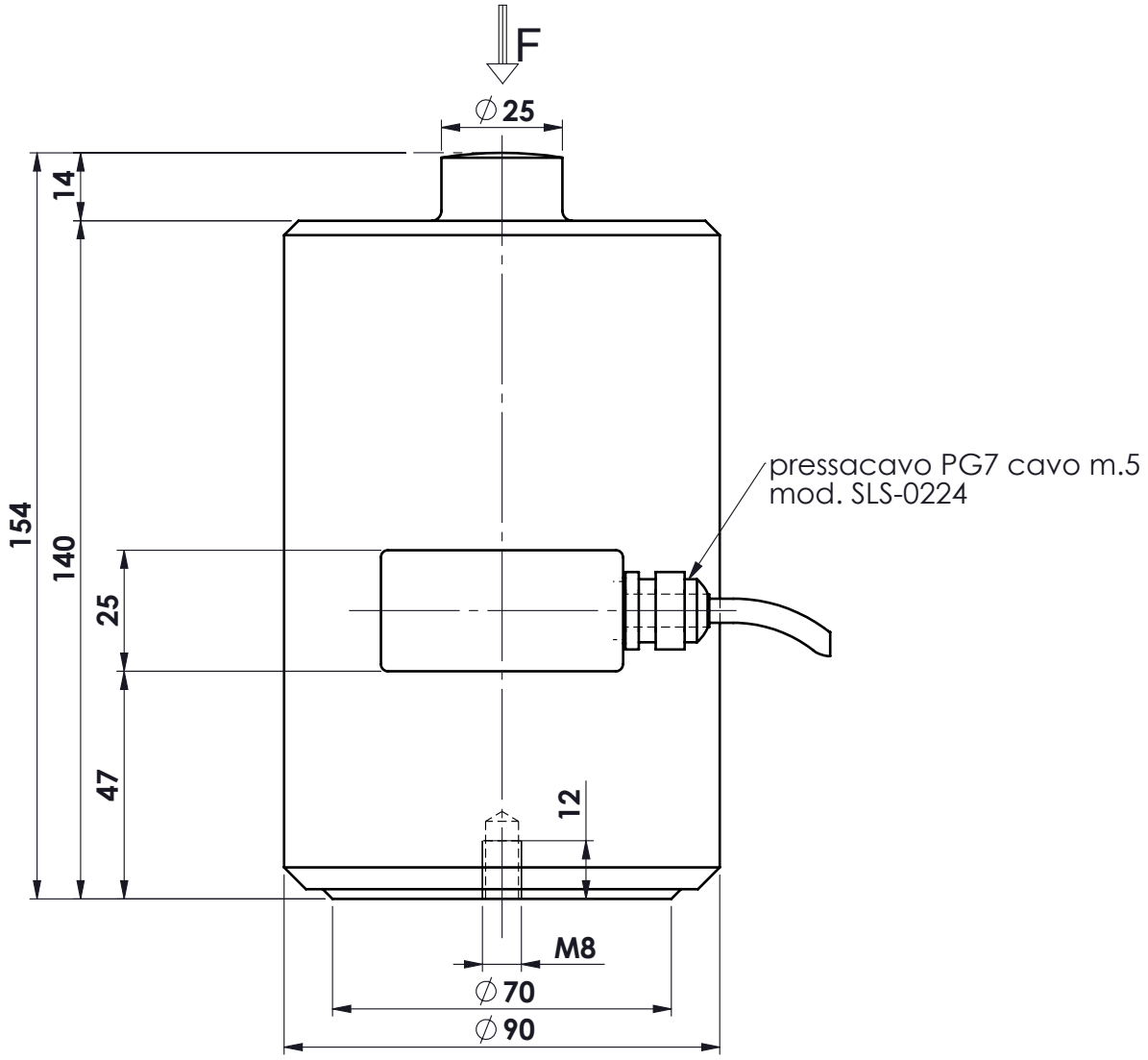

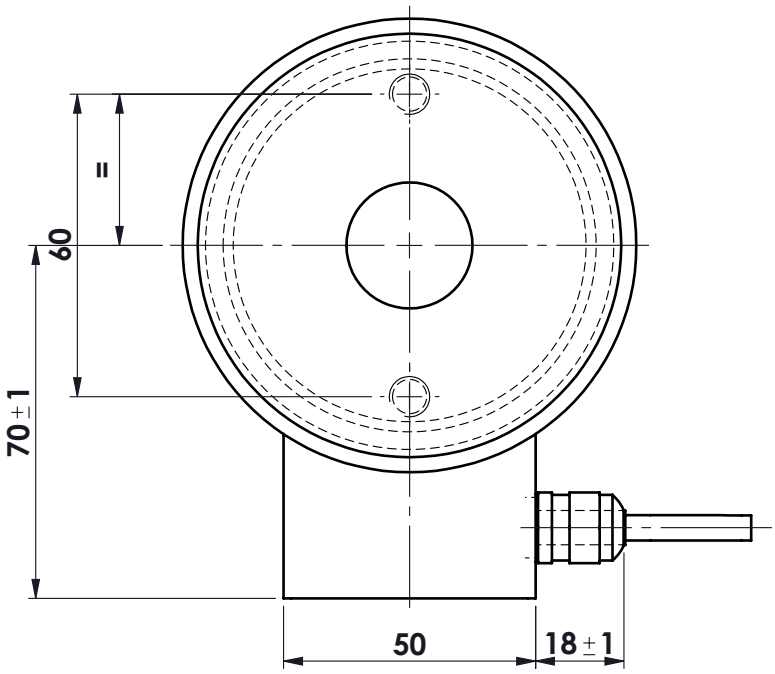

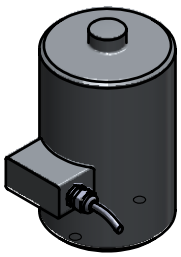

MATERIALE ACCIAIO INOX
PORTATA 2.000 kg.
SENSIBILITA' 2 mV/V
protezione IP67

General Tol.	
0 ÷ 30	±0.10
30 ÷ 100	±0.15
100 ÷ 300	±0.25
300 ÷ 500	±0.50
hole/shaft	H9 – h9
chamf. & fill.	0.5

Dimens. in mm.	Weight kg. 7.37	CELLA IN COMPRESSIONE	DWG NO. A. 1194	Sheet 1 of 1
	Date 16.11.2009	mod. CMQ 2.000	Drawn FB	Checked
	Scale 1:1.5	ASSIEME CELLA		
MATERIAL .		MACHINED FROM .	METIOR s.r.l.	
TREAT .		FINISH		

PROPERTY OF METIOR srl ANY TOTAL OR PARTIAL REPRODUCTION IS FORBIDDEN WITHOUT AUTHORIZATION

www.metior.it